This drawing is the property of Spring City Elect. Mfg. Co. and is issued to the recipient with the understanding that it shall not be copied, duplicated, passed on to unauthorized parties, nor used for any purpose other than that for which it is specifically furnished except with Spring City's written permission.

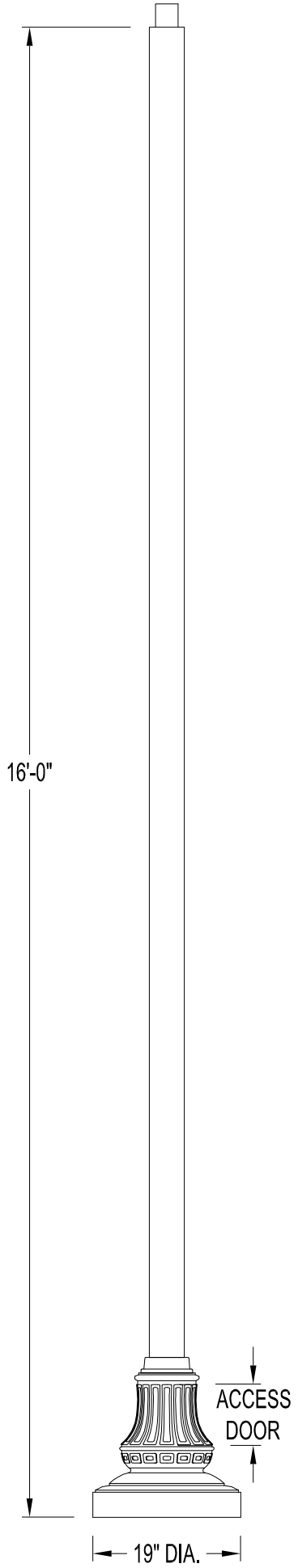

LAMP POST SPECIFICATIONS

STYLE:	CAPISTRANO
HEIGHT:	____'-____"
MAX HEIGHT:	20'-0"
BASE:	19" DIAMETER
MATERIAL:	
SHAFT:	4 1/2" DIA. - SMOOTH - ALUMINUM EXTRUSION - .237" WALL
BASE:	CAST ALUMINUM ALLOY ANSI 356 PER A.S.T.M. B26-95
FINISH:	PRIME PAINT THEN FINISH SHERWIN WILLIAMS ACROLON - PLEASE ADVISE COLOR
ACCESS DOOR:	LOCATED IN BASE SECURED WITH TAMPER PROOF HEX SOCKET SECURITY MACHINE SCREWS
GROUND STUD PROVISIONS:	DRILL AND TAP INSIDE WALL OF BASE OPPOSITE ACCESS DOOR TO ACCOMMODATE A 1/4"-20 GROUND STUD (STUD SUPPLIED BY OTHERS)
ANCHOR BOLTS:	(4) 3/4" DIA. X 24" LONG + 3" HOOK (FULLY GALVANIZED WITH 1 GALVANIZED NUT AND 1 GALVANIZED WASHER PER BOLT)
BOLT PROJECTION:	3" REQUIRED
TENON:	____" DIA. X ____" HIGH

CROSS SECTION
N.T.S.

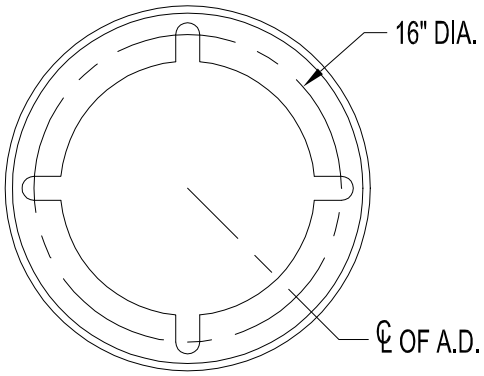

Spring City Electrical Mfg. Co.
SINCE 1943
HALL AND MAIN STREETS - P.O. BOX 19 - SPRING CITY, PA. 19475
PHONE (610) 948-4000 FAX (610) 948-5577
E-mail ADDRESS: sales@springcity.com

DESCRIPTION	APSCPS-19-__-S4	PDF